Herculed

Installation Instructions

	Luminaire's light distribution is direct.
LED	Denotes which light source/light sources that can be supplied with the luminaire.
IP65	IP Classification: Product is IP65 : No ingress of dust; complete protection against contact (dust tight). Protected against low pressure jets of water from all directions.
	Class 1: Appliances with functioning insulation. Equipped with an earth termination.
	RISK OF FIRE: (a) The minimum clearance distance from the top of the luminaire to any normally flammable building element is 100mm. (b) The minimum clearance distance from the top of the luminaire to any building insulation is 100mm. (c) The minimum clearance distance from the side of the luminaire to any normally flammable building element is 100mm. (d) The minimum clearance distance from the side of the luminaire to any building insulation is 100mm. WARNING – RISK OF OVERHEATING OR FIRE IF THE CLEARANCE DISTANCES ARE COMPROMISED.
	Luminaire is available in designs for conventional emergency lighting operation.
	RCM: Indicates a device's compliance with applicable ACMA technical standards.
	ESD: Personnel should be grounded when unpacking or handling the luminaire.
	High Voltage: Luminaire circuitry exceeds a forward voltage of 50V.

Important Information

Please read this guide carefully before installing or maintaining this equipment. Data should be used as an INDICATION only and good electrical practices should be followed at all times.

Must only be installed by a licensed electrician.

If the external flexible cable or cord of this luminaire is damaged, it shall be exclusively replaced by the manufacturer or their service agent or a similar qualified person in order to avoid a hazard.

For indoor use only.

A qualified electrician, in accordance with AS/NZS 3000:2007 wiring regulations should carry out connection to mains wiring.

This unit must be EARTHED.

Ensure that the rated voltage and frequency requirements are compatible with the available mains supply, 220-240V 50Hz.

Cleaning of reflectors and lenses should be carried out using clean, soft and lint free cloths and anti-static cleaning fluid.

Do not carry out high voltage insulation test i.e. 500/1000V this may damage the fixtures electrical components.

Warning - Applicable to New Zealand (Only)
This luminaire is not suitable for installation in locations where thermal insulation is present, or may reasonably be expected to be installed in the future, or where there is a likelihood of other combustible material, e.g. Leaves or vermin debris, etc. collecting on or around the luminaire. It is not suitable for domestic installations or installation in residential areas of non-domestic installations (residential institutions, hotels, boarding houses, hospitals, accommodation houses, motels, hostels and the like).

Surface Mounted

1. To remove frame unfasten the 12 x m5 torx with pin screws.
2. Release lanyards from gear tray and disconnect the earth lanyard from the frame. See diagram.
3. Secure fitting onto mounting surface with appropriate fasteners (not supplied) to suit mounting substrate.
4. Select cable entry/exit points and feed cable to terminal block and complete the electrical connection.
5. Reattach the lanyards and earth lanyard.
6. Refit the front frame cover using the 12 fasteners. If using a power tool ensure a low torque setting is used and does not exceed 6n.M.

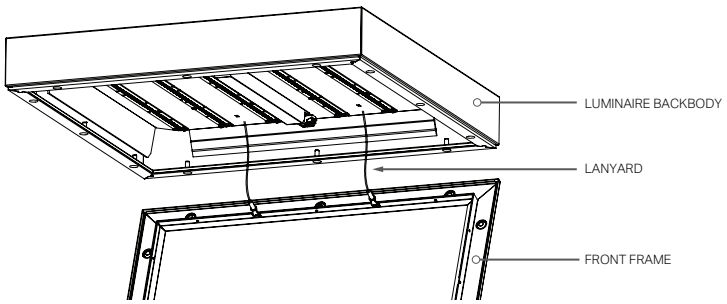

This installation instruction is relevant to the standard version of the above family. Customised variants may have mechanical changes or may have changed mounting procedures.